Subiyanto_Angga_Solo_Conf

by Yanto Subi2

Simulation model of harmonics reduction technique using shunt active filter by cascade multilevel inverter method

Angga Muhamad Andreh, Subiyanto, and Said Sunardiyo

Citation: **1788**, 030065 (2017); doi: 10.1063/1.4968318
View online: http://dx.doi.org/10.1063/1.4968318
View Table of Contents: http://aip.scitation.org/toc/apc/1788/1
Published by the American Institute of Physics

Simulation Model of Harmonics Reduction Technique using Shunt Active Filter by Cascade Multilevel Inverter Method

Angga Muhamad Andreh[1, a)] Subiyanto[1, b)] and Said Sunardiyo[1, c)]

[1]Electrical Engineering Department, Engineering Faculty, Semarang State University, Semarang 50228 Indonesia
[a)]Corresponding authors: angga.sidaichi@gmail.com
[b)]subiyanto@mail.unnes.ac.id
[c)]saidelektro@mail.unnes.ac.id

Abstract. Development of non-linear loading in the application of industry and distribution system and also harmonic compensation becomes important. Harmonic pollution is an urgent problem in increasing power quality. The main contribution of the study is the modeling approach used to design a shunt active filter in the application of the cascade multilevel inverter topology to improve the power quality of electrical energy. In this study, shunt active filter was aimed to eliminate dominant harmonic component by injecting opposite currents with the harmonic component system. The active filter was designed by shunt configuration with cascaded multilevel inverter method controlled by PID controller and SPWM. With this shunt active filter, the harmonic current can be reduced so that the current wave pattern of the source is approximately sinusoidal. Design and simulation were conducted by using Power Simulator (PSIM) software. Shunt active filter performance experiment was conducted on the IEEE four bus test system. The result of shunt active filter installation on the system (IEEE four bus) could reduce THD current from 28.68% to 3.09%. With this result, the active filter can be applied as an effective method to reduce harmonics.

INTRODUCTION

The high cost that must be paid requires efficient power service. Power utilization efficiency depends on some factors, one of the factors is power quality [1]. Good quality power system is a must, and the power quality depends on load type in the system [1,4]. It is known that there are two types of loads, they are linear load and non-linear load. Linear load generates a sinusoidal wave, meanwhile non-linear load generates non-sinusoidal (distortion) wave [2]. Ideally, current and voltage must have a sinusoidal wave that can be taken from the ideal resistor, capacitor, and inductor. Non-linear load requires non-sinusoidal current even on sinusoidal supplied voltage. If this happens, so the power quality is imperfect. This imperfect condition is caused by magnetic load or switching semiconductor that can be obtained from electrical equipment [2,5].

A major problem in power quality is harmonics which is caused by the non-linear load. Harmonics will cause negative effects on other electrical equipment that is installed in the system. The negative effects of higher harmonics include among others [1]:

- Overloads, too early aging or failures of many elements of power systems, such as motors, transformers, capacitor banks, generators and specifically components of information and communication networks.
- Overloads of neutral conductor in three phase systems caused by the sum of the third harmonics. As a result, the neutral current RMS value can be many times greater than for the phase currents. Many networks that are currently in use are not ready to supply those loads.
- Higher harmonics causes resonance phenomena that lead to failure.
- System overloads and higher losses in resistive elements because of increased current RMS values. These effects are typically visible in the case of current impulsive waveforms that are characteristic for switched-mode power supplies (PC, mobile phone chargers, etc.) and compact fluorescent lights. Even though low average value these waveforms are characterized by high RMS value. Even, the energy losses in supply systems can be a few times greater comparing to the sinusoidal case.

Therefore, developing devices capable of reducing harmonic distortion and supplying reactive power is becoming important. Recently, passive and active filters have been used for harmonic compensation. They have

International Conference on Engineering, Science and Nanotechnology 2016 (ICESNANO 2016)
AIP Conf. Proc. 1788, 030065-1–030065-10; doi: 10.1063/1.4968318
Published by AIP Publishing. 978-0-7354-1452-5/$30.00

the capability of damping harmonic impact between the switching loads and power source. According to the type of applications and load ratings, an appropriate combination of passive and or active filters can lead to an efficient compensator capable of improving the electrical energy quality and hence decreasing distributors and power bills customers.

In the literature [2-7], it has proposed different topologies of series and shunt filters. Using LC passive filters can simply prevent harmonic noise on the line side of the power source by absorbing generated current harmonics. But, they can't adapt load and source frequency change and cause resonances that can accelerate the failure of the system. The use of active filters (AF) is an alternative solution which recognizes its efficiency and adaption to load and frequency change [8].

In this paper, the study is focused on shunt active filter system which behaves like a harmonic current source connected in parallel to disturbing loads to reduce the injection of current harmonics into the supply system. It injects with an opposite phase into a current network with the same amplitude of the harmonic current required by switching loads. Accordingly, power quality is improved and the current supplied by the utility network is sinusoidal. It is well known that the current (I_{load}) required by a nonlinear load can be divided into fundamental (I_{loadf}) and harmonic (I_{loadh}) components. The role of a shunt active filter is to generate current harmonics (I_{loadh}) required by the disturbing load such that the current delivered by the power source is sinusoidal. Figure 1 shows the principle of harmonic compensation using a shunt active filter system.

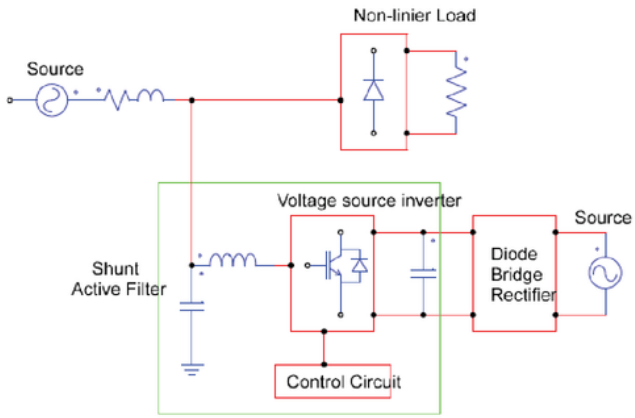

FIGURE 1. Principle of a shunt active filter [10]

Since early 1980 decade, it has proposed many methods for current harmonic reduction using an active filter. Some of them are time-based (currents correction, instantaneous power or pq-theory, capacitor voltage control, dq-theory or synchronous reference frame), and others are frequency based (wavelets, Fourier series resonant controllers) [9-11].

On the other side, the multilevel converters have been very popular in applications because they are capable of producing better quality waveforms (lower total harmonic distortion) using standard semiconductors [12-13]. The most popular multilevel inverter configurations are Cascade H-Bridge (CHB), Flying Capacitor (FC) and Neutral Point Clamped (NPC) [14]. Among these multilevel converter topologies, the cascade H-bridge is possible to use for its modularity and the ability to reach high-power levels using standard semiconductors. The advantage of cascade H-bridge topology is that possibility to gain more voltage levels using asymmetrical voltage sources, at the cost of losing redundancies and this modularity [15].

Cascade Multilevel Inverter (CMI) is one of the most important topologies in the group of multilevel inverters. It needs least number of components comparing to diode-clamped and flying capacitors type multilevel inverters. It has a modular structure with simple switching method and takes less space [16-18].

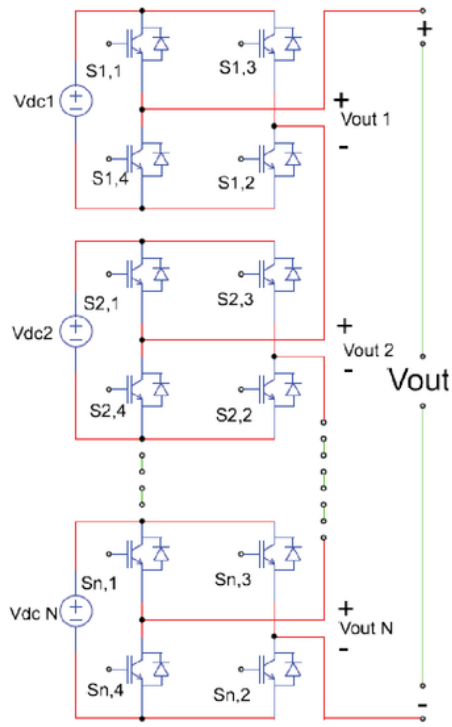

FIGURE 2. Configuration of a single-phase CMI [19]

The CMI consists of some H-bridge inverter units with the dc source which is separated each unit and connected in a cascade that is shown in Fig. 2. Each H-bridge can produce three different voltage levels: -Vdc, 0, and +Vdc by connecting the dc source to ac output side by four different combinations of switches S1, S2, S3, and S4. The sum of all individual H-bridge outputs synthesized by output voltage waveform in which the ac output of each H-bridge is connected in series. A nearly sinusoidal output voltage waveform can be synthesized by connecting the sufficient number of H-bridges in cascade and using proper modulation scheme.

The novel of this work is by using shunt active filter with Cascaded Multilevel Inverter 11-Level cascaded 5-Bridge method. CMI 11 Level cascaded 5-Bridge output consists of 11 level amplitudes, they are +5, +4, +3, +2, +1, 0, -1, -2, -3, -4, -5. This method doesn't require high switching frequency. The output of power is bigger than it. It doesn't require any transformer. Besides, by using this method, THD in the system can be reduced. Shunt active filter is designed by using PSIM software simulation, and after that, its performance is tested by comparing THD without a filter to THD with shunt active filter cascaded multilevel inverter.

EXPERIMENTAL METHOD

Working principle of cascaded multilevel inverter method as the active filter is by generating harmonic wave system. A harmonic wave of the system becomes a reference of the inverter circuit. The aim of Cascaded Multilevel Inverter circuit is to generate same shape and amplitude as harmonic wave system. Then, the output of the inverter will be injected into the system as harmonic compensation.

Overall, modeling of shunt active filter is shown in Fig. 3, which is the block diagram system. As shown in Fig. 3, the system is divided into some parts; they are Filtering, Controlling, Leveling, Triggering and Cascaded Multilevel Inverter.

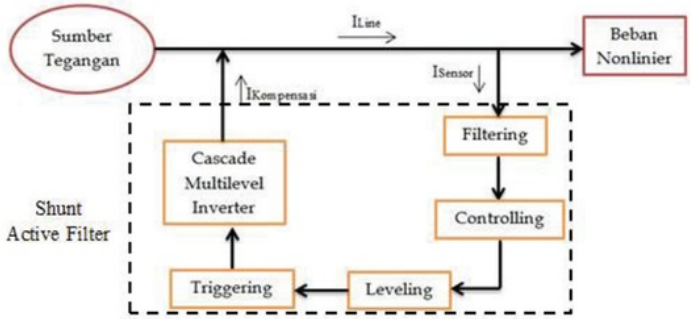

FIGURE 3. Shunt active filter block diagram [14,18]

Filtering

The filtering process is aimed to obtain harmonics wave by using band pass filter. Filtering circuit is shown in Fig. 4.

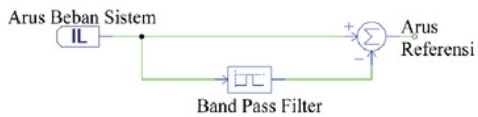

FIGURE 4. Filtering circuit

IL is load current system. I_L load current should be reduced by the fundamental component to get reference wave. One of the ways to get the reference wave is by filtering load current on the frequency of 50Hz band pass, then load current is reduced by fundamental component so that only harmonic component current is obtained.

Band pass filter current signal input is fundamental current that is sensed by a current transformer (CT). The input signal (fundamental current and harmonics current) is changed into a voltage signal by constant modulation, equals one. Then the current signal is the equal voltage signal representative, as a band pass filter function that is releasing signal on 50 Hz fundamental frequency and blocking another frequency signal.

Band pass filter parameter consists of:

$$\text{Center frequency [12] } Fo = \omega o / 2\pi \quad (1)$$

Center frequency is set at 50 Hz because fundamental frequency of voltage source is 50 Hz. The value of Gain k is 1 so that output band pass filter equals input band pass filter.

$$\text{Bandwidth [12] } Fb = B / 2\pi \quad (2)$$

Bandwidth is 50 Hz so that it can release 50 Hz fundamental frequency and block other frequency, exclude 50 Hz frequency.

Controlling

Control of the simple proportional-integral-derivative (PID) can repair flaw wave that is caused by nonlinear load and reduces current THD under maximum value whose value is determined by an international standard (IEEE Standard 519-1992). PID diagram block is shown in Fig. 5.

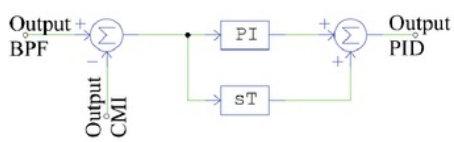

FIGURE 5. PID control

The input signal on PID control is the difference between the harmonic signal from bandpass filter and the output signal from multilevel cascade inverter which is negative feedback. While output signal from PID control will be processed by the comparator to change signal into a pulse, trig cascade multilevel inverter circuit.

In this study, a method that is used to determine gain value and time constant is trial and error. Table method isn't used due to inappropriate response system. There are some problems should be noticed before tuning PID to obtain control parameter. The main reference is by observing output signal overshoot. If it is too high, so the gain value is lowered. If damping is too high, so time constant arises, to change duty cycle signal, switching is conducted by changing gain in PID controller.

Setting parameter value that is used in control system is:

Proportional : Gain = 10
Integrator : Time Constant = 1.09
Differentiator : Time Constant = 0.0003

Leveling

This study is conducted by utilizing the simplicity of multi-carrier sine PWM. It will be explained in the following paragraph. For an n-level inverter, N-1 carriers with the same amplitude Ac and the same frequency fc are disposed of so that the bands they take are impacted. The reference waveform has got maximum amplitude Am, a frequency fm, and its zero is in the middle of the carrier set. The reference is compared to each of the carrier signals continuously. If the reference is greater than a carrier signal, then the IGBT related to that carrier is switched on and if the reference is less than a carrier signal, then the IGBT related to that carrier is switched off [20].

In multilevel inverters, The ratio of reference amplitude (A_m) to carrier amplitude (A_c) is the amplitude modulation index (M_a) [21].

$$M_a = A_m / (m-1) A_c \tag{3}$$

The frequency ratio (M_f) is ratio of carrier frequency (F_c) to reference frequency (F_m) [21].

$$Mf = F_c / F_m \tag{4}$$

In phase disposition method, all the carriers have the same frequency and amplitude. Moreover, all the N-1 carriers are in phase with each other. It refers to the comparison of a sinusoidal reference waveform to vertically shifted carrier waveforms shown in Fig. 6. This method uses N–1 carrier signals to generate an output voltage of n-level inverter [20]. All the carrier signals have the same amplitude, same frequency and are in phase [21]. In this method, ten triangular carrier waves have compared to the one sinusoidal reference wave.

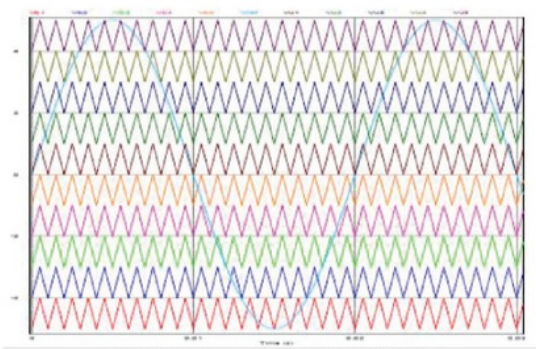

FIGURE 6. Phase Disposition Modulation

Triggering

A number of a switch on the inverter are symbolized by S, with the following equation 5 [14].

$$S = 2(n - 1) \tag{5}$$

Note:
S = Number of switches
n = Number of Levels

Based on the above equation, switch number of 11 levels cascaded 5 bridge inverters are 20. The output from each full bridge inverter circuit has got 3 types of the output voltage. They are +V, 0, and –V. Those three types of voltage are generated by switching control (S1, S2, S3 and S4).

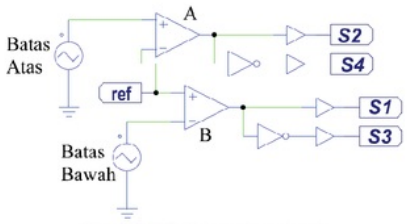

FIGURE 7. Triggering circuit

As explained before that on the 11 level cascaded five bridge, the generated amplitude by inverter are varied from –V5 until +V5. The 20 switches have got the important role in this case to control amplitude variation.

Cascade Multilevel Inverter

One of the ways to implement cascade multilevel inverter method is by using one-phase full bridge rectifier inverter that is connected in series with separated voltage source. N-level cascaded H-Bridge where n is a level number of Multilevel Inverter output while H is cascaded full bridge inverter [18].

$$n = 2H + 1 \tag{6}$$

Note:
n = Number of Cascaded Multilevel Inverter level
H = Number of Full bridge inverter

The number of level on Cascaded Multilevel Inverter, the softer the output voltage. However, as shown in equation 6, the higher the level, the more the H (number of the inverter) so that the more components are needed. Research on 22 nt active filter is by using Cascaded Multilevel Inverter 11-level cascaded 5-bridge. The whole circuit system is shown in Fig. 8.

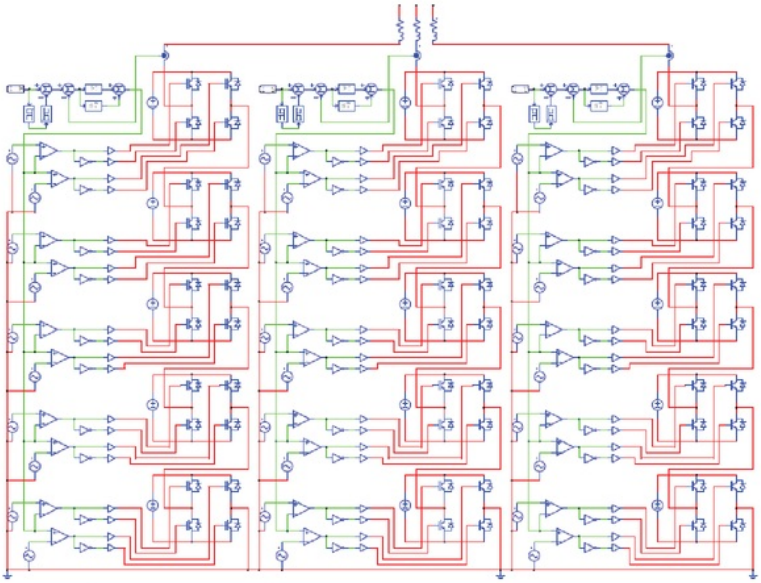

FIGURE 8. Cascade Multilevel Inverter (CMI) configuration of shunt active filter

In this study, shunt active filter parameter is designed by using Power Simulator 9.0.3 software. Performance test of shunt active filter is conducted by 4-bus IEEE test system using SimView library PSIM 9.0.3 software. Test system data that is used is distribution network topology, data of load and transmission. Below is distribution network topology four bus IEEE test system (Fig. 9) [22]:

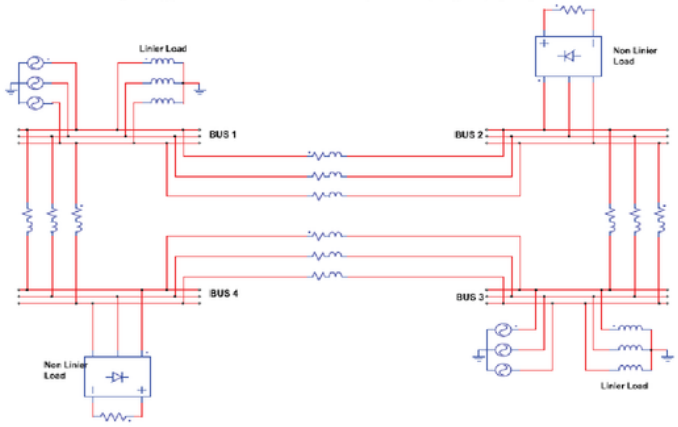

FIGURE 9. Model of IEEE four bus test system

RESULTS AND DISCUSSION

In this simulation, a circuit that is used as a performance test of shunt active filter CMI is system interconnected IEEE 4 bus test system. The optimum power filter placement (passive filter and active filter) is on the bus 2 and bus 4. Wiring diagram of IEEE 4 bus system is drawn by using PSIM software as shown in Fig. 9.

The following figures show wave shape without a filter, wave shape after passive filter single tuned was installed, and wave shape after shunt active filter was installed.

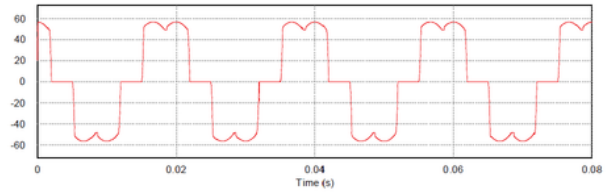

(a) Wave shape without filter

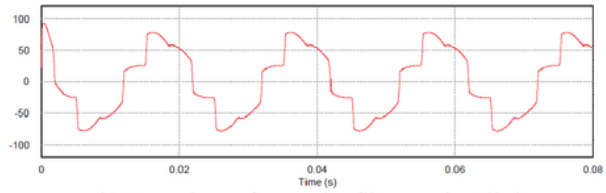

(b) Wave shape after passive filter was installed

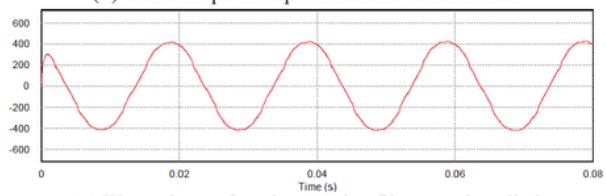

(c) Wave shape after shunt active filter was installed

FIGURE 10. Wave shape without and with filter

Figure 10 above show that current wave distortion is decreasing and becomes sinusoidal. It means that by using passive filter single tuned can also decrease harmonic effect on the 4-bus system that makes the current wave more sinusoidal. Moreover, the use of shunt active filter can significantly decrease harmonic effect that leads to the much more sinusoidal current wave.

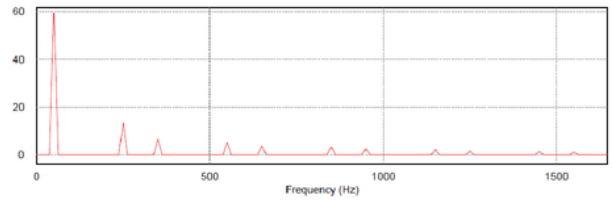

(a) Spectrum frequency before Filter Installment

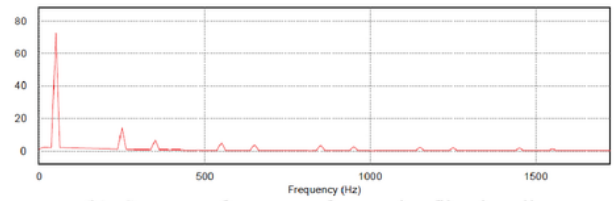

(b) Spectrum frequency after passive filter installment

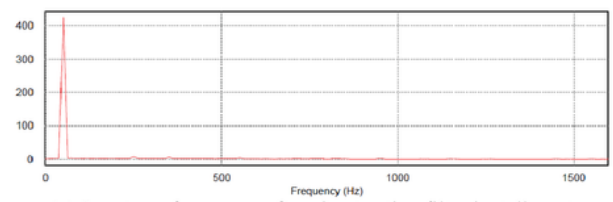

(c) Spectrum frequency after shunt active filter installment

FIGURE 11. Spectrum frequency before and after filter installment

From the pictures above, after installment of passive filter single tuned and shunt active filter CMI, harmonic frequency on network interconnected with harmonic orde low voltage above one will get less value comparing to the condition before installment of the two types of filters. Current wave on each bus system after installment of shunt active filter consists of only fundamental current. It means that shunt active filter CMI can decrease harmonic current on the system interconnected with low voltage. So, wave current on each bus system is more sinusoidal.

TABLE 1. THD IEEE standard

Maximum Harmonic Current Distortion in Percent of I_L						
	Individual Harmonic Order (Odd Harmonic)					
I_{SC}/I_L	< 11	11 ≤ h ≤ 17	17 ≤ h ≤ 23	23 ≤ h ≤ 35	35 ≤ h	THD (%)
< 20	4	2,0	1,5	0,6	0,3	5,0
20 – 50	7	3,5	2,5	1,0	0,5	8,0
50 – 100	10	4,5	4,0	1,5	0,7	12,0
100 – 1000	12	5,5	5,0	2,0	1,0	15,0
1000	15	7,0	6,0	2,5	1,4	20,0
Isc = Maximum short-circuit current						
IL = Maximum load current						

Table 1 is harmonic percentage standard for THD current [10]. I_{SC}=16638.002A is obtained from PSIM simulation by connecting the short-circuit between line phase and ground then notice the result measurement I_{rms}. I_L=235.918A is nominal fundamental load current. So, I_{SC} / I_L = 70.52 (50 - 100). Based on Table 1, the maximum standard of THD current is 12%.

TABLE 2. Shows comparison of THD current on the system interconnected with low voltage network.

Orde	Current Magnitude before Filter Installment				Current Magnitude After Passive Filter Installment				Current Magnitude After Active Filter Installment			
	Bus 1	Bus 2	Bus 3	Bus 4	Bus 1	Bus 2	Bus 3	Bus 4	Bus 1	Bus 2	Bus 3	Bus 4
5	6.7	6.7	20.1	6.7	13.8	14.3	13.8	14.3	5.2	3.7	15.7	3.7
7	3.2	3.3	9.8	3.3	6.8	6.7	6.8	6.7	2.5	3.7	7.4	3.7
11	2.6	2.6	7.7	2.6	5.1	4.9	5.1	4.9	1.6	2.4	4.9	2.4
13	1.7	1.7	5.2	1.7	3.5	3.6	3.6	3.6	1	0	3.1	0
17	1.5	1.5	4.5	1.5	3.1	3.2	3.1	3.2	1	1.2	3.1	1.2
19	1.1	1.1	3.3	1.1	2.3	2.3	2.3	2.3	0.8	1.3	2.4	1.3
23	1	1	2.9	1	2.1	1.9	2.1	1.9	0.5	0	1.5	0
25	0.7	0.7	2.2	0.7	1.6	1.7	1.6	1.7	0.4	0.7	1.3	0.7
29	0.7	0.7	2	0.7	1.4	1.6	1.4	1.6	0.5	0.9	1.4	0.9
31	0.5	0.5	1.5	0.5	1.1	1.1	1.1	1.1	0.4	0	1.2	0
THD%	28.64	28.69	28.70	28.68	24.26	24.37	24.28	24.37	3.16	3.10	3.16	3.10

Table 2 shows that there is a significant reduction of harmonic wave after installment of passive filter single tuned and shunt active filter cascade multilevel inverter. THD current average on each bus is 24.3% with passive filter single tuned. THD current average on each bus is 3.09% with shunt active filter. Therefore, there is a good progress of THD current level that is 12% (below IEEE standard) after installment of the shunt active filter cascade multilevel inverter.

CONCLUSIONS

This paper presented that a shunt active filter cascade multilevel inverter was used to reduce (decrease) harmonic current on the power system (4-bus system). The result was that a shunt active filter installment could reduce (decrease) harmonic current that was caused by the nonlinear load (rectifier) with initial THD current = 28.68% then reached final THD current = 3.09%. In this case, final THD current is much better than before according to IEEE standard 519 -1992, where the maximum standard of THD current for the power system is 12%.

ACKNOWLEDGMENT

I would like to thank Engineering Faculty of Semarang State University for supporting the research funding.

REFERENCES

1. R.C. Dugan, M.F. Mc Granaghan, S. Santoso and H.W. Beaty, *Electrical Power Systems Quality*, (McGraw-Hill, New York, NY, 2005), pp 209-223
2. B. Singh, K. Al-Haddad and A. Chandra, IEEE Trans. Elect. Ind. **46(5)**, 960-967 (1999).
3. S. Bhattacharya, D. M. Divan and B. Banerjee, IEEE Elect. Ind. 53-63 (1995).
4. H. Rudnick, J. Dixon and L. Moran, "Delivering clean and pure power," IEEE Power and Energy Magazine, 32-40 (2003).
5. B. N. Singh, P. Rastgoufard, B. Singh, A. Chandra and K. Al-Haddad, IEEE Electric Power Appl. **151(4)**, 467-476 (2004).
6. H. Akagi, {IEEE} Trans. Ind. Appl. **32 (6)**, 1312-1322 (1996).
7. S. Bhattacharya, T. M. Frank, D. M. Divan, and B. Banerjee, IEEE Ind. Appl. Magazine **4(5)**, 47-63 (1998).
8. G. Superti-Furga and G. Todeschini, {IEEE} Trans. Power Elect. **23(4)**, 1945-1955 (2008).
9. A.M. Massoud, J.S. Finney and W. Williams, "Seven-level shunt active power filter", in *Harmonics and Quality of Power-2004*, 11th International Conference on Harmonics and Quality of Power, pp. 136-141.
10. A. Szromba, COMPEL **23(4)**, 1146-1162 (2004).
11. R. Bojoi, G. Griva, F. Profumo, M. Cesano and L. Natale, COMPEL **27(2)**, 445-459 (2008).

12. Bin Wu, *High Power Converters and AC Drives*, (John Wiley & Sons, Hoboken, New Jersey, 2006), pp. 123-124.
13. L. Franquelo, J. Rodriguez, J. Leon, S. Kouro, R. Portillo and M. Prats, IEEE Ind. Elect. Magazine, 28-39 (2008).
14. J. Rodrı´guez, L. Jih-Sheng and F. Z., Peng, IEEE Trans. Ind. Elect. **49(4)**, 724-738, (2002).
15. J. Dixon and L. Moran, IEEE Trans. Power Elect., 330-337 (2006).
16. J-S Lai and F.Z. Peng, IEEE Trans. Appl. Ind. **32(3)**, 509-517 (1996).
17. F. Z. Peng and J-S Lai, IEEE Trans. Appl. Ind. **32 (5)**, 1130-1138 (1996).
18. F. Z. Peng, J. W. McKeever, and D. J. Adams, "Cascade Multilevel Inverters for Utility Applications", in *Industrial Electronics, Control and Instrumentation-1997*, IECON Proceedings (Industrial Electronics Conference), pp. 437-442.
19. P.T.Krishna Sai and Mahammad.Iliyas, IJER **4(5)**, 465-469 (2015).
20. L. M. Tolbert and T. G. Habetler, IEEE Trans. Appl. Ind., 1424-1431 (1998).
21. B.P.Mcgrath and D.G Holmes, IEEE Trans. Ind. Elect. **49(4)**, 858-867 (2002).
22. N.L. Surasmi and M.R. Sindhu, IJETAE **2(4)**, 251-256 (2012).

icesnano 2016

Certificate of Appreciation

to

Angga Muhamad Andreh

for having involved as

PRESENTER

in

International Conference on Engineering, Science and Nanotechnology 2016

Solo, Indonesia

August 3rd (Wed)-5th (Fri), 2016

Organisers

UNS UNIVERSITAS SEBELAS MARET

UTHM Universiti Tun Hussein Onn Malaysia

icesnano 2016

Dr. Budi Kristiawan
Conference Chair

Subiyanto_Angga_Solo_Conf

ORIGINALITY REPORT

22%	14%	18%	%
SIMILARITY INDEX	INTERNET SOURCES	PUBLICATIONS	STUDENT PAPERS

PRIMARY SOURCES

1	ijareeie.com Internet Source	4%
2	Dariusz Grabowski, Marcin Maciążek, Marian Pasko. "Sizing of active power filters using some optimization strategies", COMPEL - The international journal for computation and mathematics in electrical and electronic engineering, 2013 Publication	4%
3	www.ijraset.com Internet Source	3%
4	Hernaldo Saldías Molina, Juan Dixon Rojas, Luis Morán Tamayo. "Finite set model predictive control to a shunt multilevel active filter", COMPEL - The international journal for computation and mathematics in electrical and electronic engineering, 2015 Publication	2%
5	mafiadoc.com Internet Source	1%

6	jurnalpemasaran.petra.ac.id Internet Source	1%
7	www.ijsr.net Internet Source	1%
8	Akagi. "Shunt Active Filters", Instantaneous Power Theory and Applications to Power Conditioning, 02/02/2007 Publication	1%
9	www.deltadore.com Internet Source	1%
10	Zahira, Rahiman, A. Peer Fathima, and Ranganath Muthu. "Modelling, Simulation and Implementation of the Three-Phase Fuzzy Based Shunt Active Filter for Limiting the Total Harmonic Distortion", Applied Mechanics and Materials, 2014. Publication	1%
11	www.ijser.in Internet Source	<1%
12	Jose Simpson, Adolfo Paredes, Jorge Pontt, Cesar Silva. "Predictive Control of Active Filtering for Industrial Mining Installations", 2009 IEEE Industry Applications Society Annual Meeting, 2009 Publication	<1%

13	Panda, A.K., and S. Mikkili. "Simulation and real-time implementation of shunt active filter id–iq control strategy for mitigation of harmonics with different fuzzy membership functions", IET Power Electronics, 2012. Publication	<1%
14	www.its.ac.id Internet Source	<1%
15	Chi-Jui Wu. "Developing a harmonics education facility in a power system simulator for power engineering education", IEEE Transactions on Power Systems, 1997 Publication	<1%
16	www.rspublication.com Internet Source	<1%
17	espace.curtin.edu.au Internet Source	<1%
18	theaccents.org Internet Source	<1%
19	Chitra, A., and S. Himavathi. "Investigation and analysis of high performance green energy induction motor drive with intelligent estimator", Renewable Energy, 2016. Publication	<1%
20	Shukla, Stuti, S. Mishra, and Bhim Singh. "TS	<1%

fuzzy based intelligent control of a three phase shunt filter under balanced and unbalanced conditions", 2010 Joint International Conference on Power Electronics Drives and Energy Systems & 2010 Power India, 2010.
Publication

21	Al Chaer, T., J.-P. Gaubert, L. Rambault, and M. Najjar. "Linear Feedback Control of a Parallel Active Harmonic Conditioner in Power Systems", IEEE Transactions on Power Electronics, 2009. Publication	<1%
22	E. Bircenas, S. Ramirez, V. Cardenas, R. Echavarria. "Cascade multilevel inverter with only one DC source", VIII IEEE International Power Electronics Congress, 2002. Technical Proceedings. CIEP 2002., 2002 Publication	<1%
23	epdf.tips Internet Source	<1%
24	www.emo.org.tr Internet Source	<1%

Exclude quotes	On	Exclude matches	< 4 words
Exclude bibliography	On		